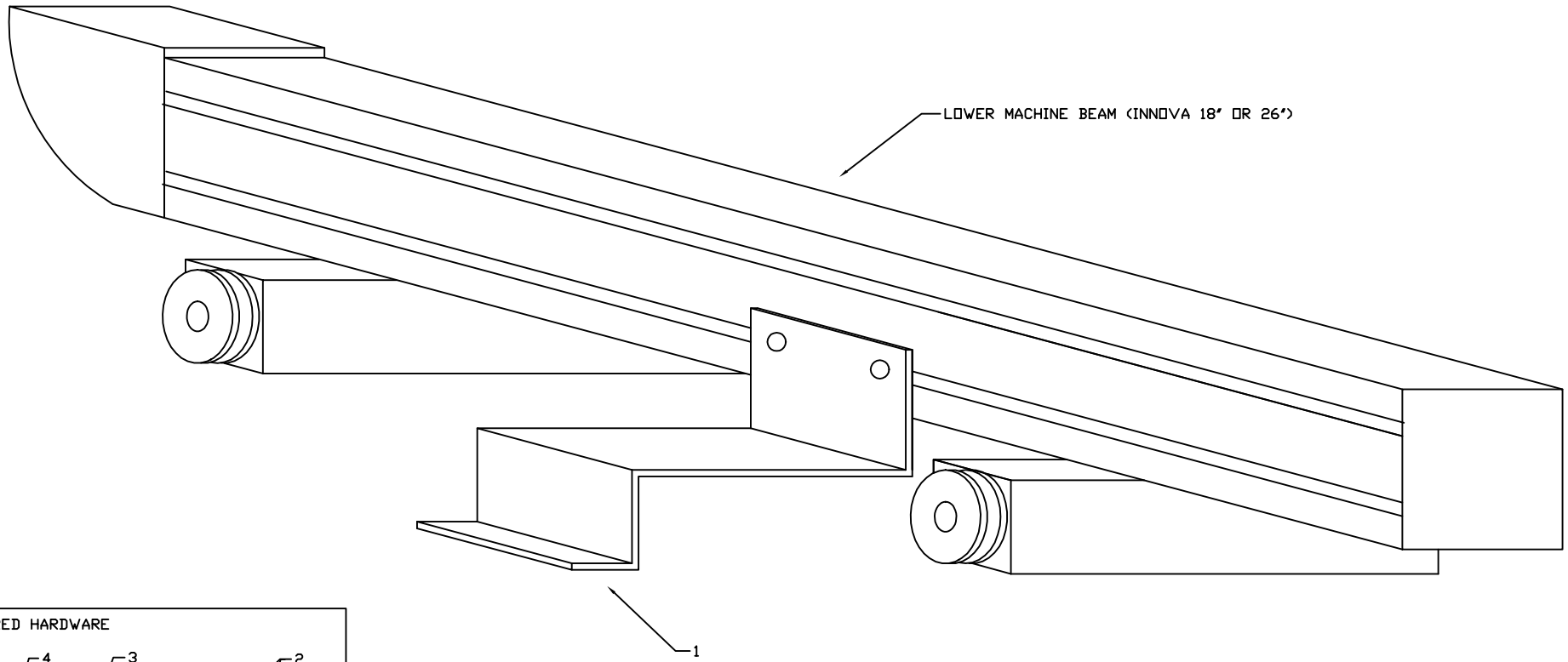

REQUIRED HARDWARE

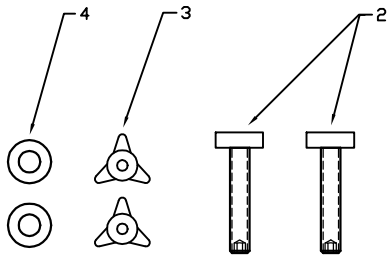

NO.	DESCRIPTION	QTY.
1	QUILT-EZ BRACKET	1
2	90° TWIST LOCK STUD	2
3	THREE SPOKE KNOB	2
4	FLAT WASHER (5/16 SAE)	2

INCHES
UNLESS OTHERWISE SPECIFIED
DO NOT SCALE DRAWING
ALL DIMENSIONS ARE IN INCHES
ALL STOCK AND CUT-OFF DIMENSIONS ±0.031
ALL TWO PLACE DECIMAL DIMENSIONS ±0.010
ALL THREE PLACE DECIMAL DIMENSIONS ±0.005
ALL FOUR PLACE DECIMAL DIMENSIONS ±0.0005
ALL MACHINED ANGLES ±0°-15'
C'SINK ALL TAPPED HOLES.
REMOVE ALL BURRS AND SHARP CORNERS.
UNFINISHED CASTING AND WELDMENT DIMENSIONS ±0.125
BURNOUT DIMENSIONS ±0.125
DO NOT USE REF. DIMENSIONS FOR MANUFACTURING.
DIMENSIONS IN [xx] ARE IN INCHES.
125 OR BETTER ON ALL MACHINED SURFACES.

ABM INTERNATIONAL
A.B.M. INTERNATIONAL Inc.
211 SEEGERS AVENUE
ELK GROVE VILLAGE, IL 60007

TITLE: QUILT EZ BRACKET INSTALLATION

PINKY

DRAWN BY: JOE PODOLSKI DATE: 5/9/2008
CHECKED BY: -- DATE: --
PROJ. NO. PNQ SCALE: NONE
SHEET NO. 1 TOTAL SHEETS 1 DRAWING NO. M-PNQ-030